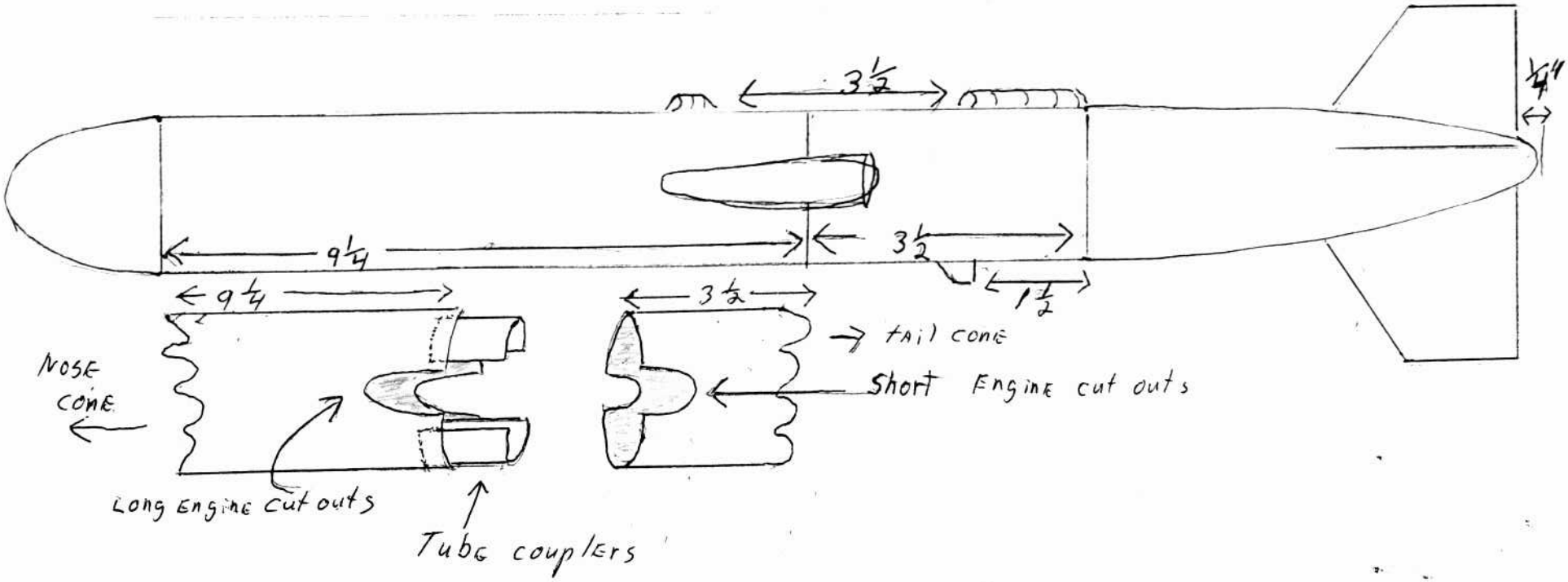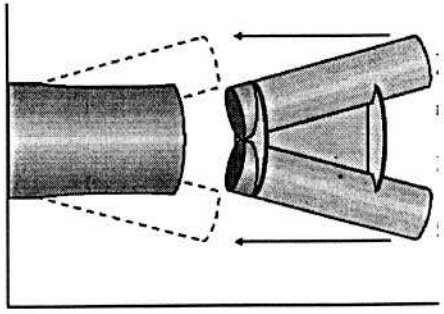
3 1/2
1/4"
9 1/4
3 1/2
1 1/2
9 1/4
3 1/2
tail cone
Short Engine cut outs
NOSE CONE
Long Engine cut outs
Tube couplers